OBERDORFER PUMPS
A Gardner Denver Product

CHEMSTEEL®

PRESSURE RELIEF VALVES

A CHEMSTEEL SUPPLEMENT

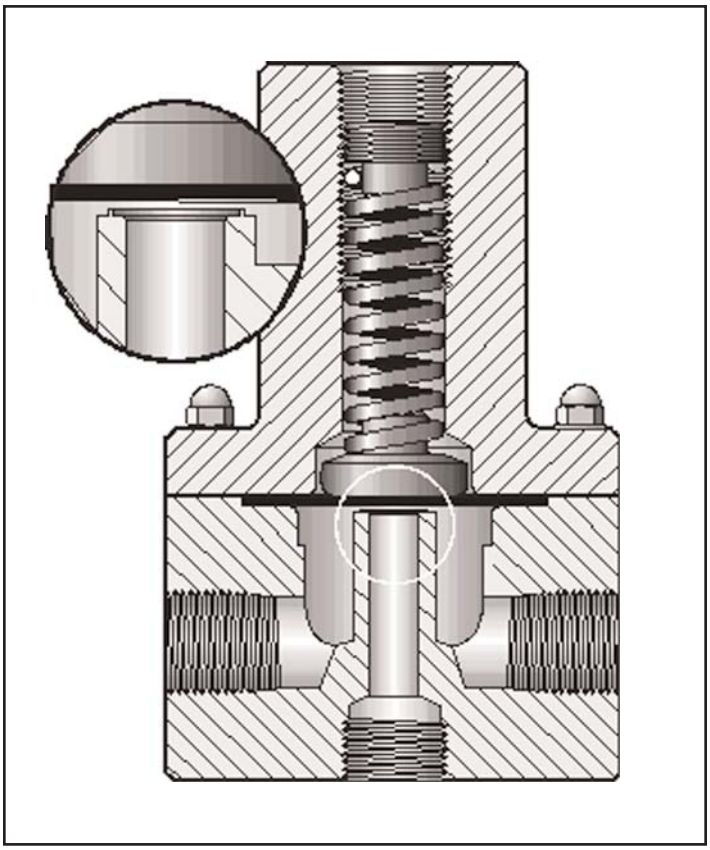

Diaphragm pressure relief valves are designed to protect chemical feed systems from over pressure damage caused by defective equipment or a blockage in the chemical feed line. Robust construction ensures reliability in the rigorous service of municipal and industrial applications. Materials of construction include PVC, 316 SS, and Hastalloy C®. Available in sizes 1/4" through 1".

FEATURES

- High Reliability / Low Cost
- Robust, Machined Construction
- Vulcanised PTFE/EPDM Diaphragm
- Externally Adjustable 10 - 150 PSI
- Ventable to Suction Line
- Wide Range of Materials
- Tamper Resistant Adjustment Screw

OPERATION

Diaphragm pressure relief valves operate when the pressure in the chemical system exceeds the preset pressure of the valve. The diaphragm is held against the valve seat by an internal spring. When the preset pressure is exceeded the diaphragm is forced up and the chemical flow out the relief port, back to the chemical tank or to the suction side of the pump. The valves are preset for 50 psi, however they are field adjustable from 10 - 150 psi, via the adjustment screw with the special tool. The relief valve should be set approximately 15 psi higher than the system pressure. Installation should be made as close to the pump as possible, without any valves or accessories between the relief valve and the pump. Consult your pump manufacturer for his recommendations.

MODEL NUMBER TABLE & PRICES

Pump		Valve		Part Numbers and Pricing			
GPM	Conn.	Conn.	GPM	Model #	-P (PVC)	-S (316SS)	-C (Alloy C)
1	1/4	1/4	5	MT025	*	*	*
2	1/2	1/2	21	MT050	*	*	*
4	1/2	1/2	21	MT050	*	*	*
10	3/4	3/4	21	MV075	*	*	*
23	1 1/4	1	26	MV100	*	*	*

Call for pricing

DIMENSIONS

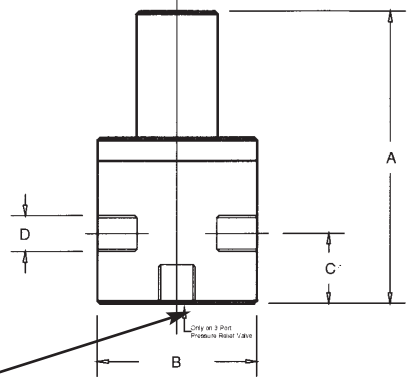

Only on 3 Port Pressure Relief Valve

D	1/4	1/2	3/4	1
A	3.500	5.500	5.500	6.250
B	2.375	3.500	3.500	3.500
C	0.750	1.125	1.125	1.375

TECHNICAL DATA

Sizes:			¼", ½", ¾", 1"	
Connections:			NPT	
Pressure Adjustment			10 - 150 psi	
Flow Rates @ 150 psi			**Shipping Weight: lbs**	
Size	Pulsating	Continuous	Plastic	Metal
1/4" 1/2" 3/4" 1"	100 USgph 300 USgph 300 USgph 500 USgph	5 USgpm 21 Usgpm 21 Usgpm 26 Usgpm	1.0 3.0 3.0 3.5	3.0 7.0 7.0 8.0
Max Temperature: (°F)			Plastic: 140° ; Metal: 300°	
Materials of Construction:				
Diaphragm			PTFE / EPDM, Optional: Viton	
Valve Top			Standard: PVC Optional: CPVC, Steel, 316 SS	
Valve Body			PVC, 316 SS, Alloy C	

COMPONENT DRAWING

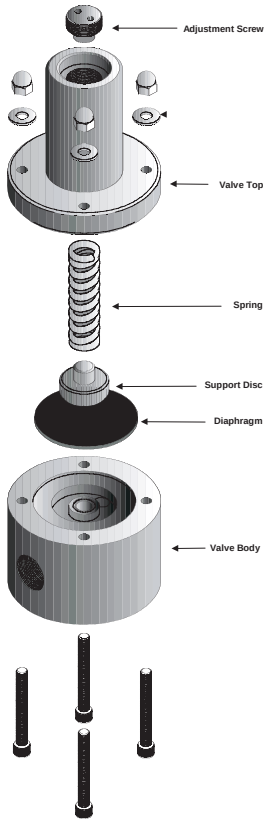

PERFORMANCE CURVES

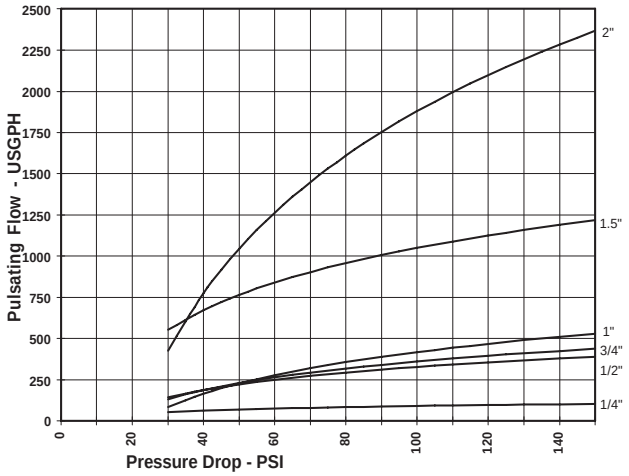

www.oberdorfer-pumps.com PHONE (800) 448-1668; (315) 437-0361 FAX (315) 463-9561